PRODUCT SHEET

Description:
Elec. Combination Cam Lock, "Marc M2", Private, Silver/Black Body, Incl. Striking Plate & Straight Cam Pl. CE: 47mm, (Battery CR2032 Not Included) - Download Userguide, From www.siso.dk - Mastercode:32213341 - Changing Master, Code: 32213341+OK+OK+OK+new master code, (8 digits)+OK

Item number:
14.60.391-9

Units	Box	Carton	HS Code	Barcode
Pcs.	1	50	8301300000	5704866512763

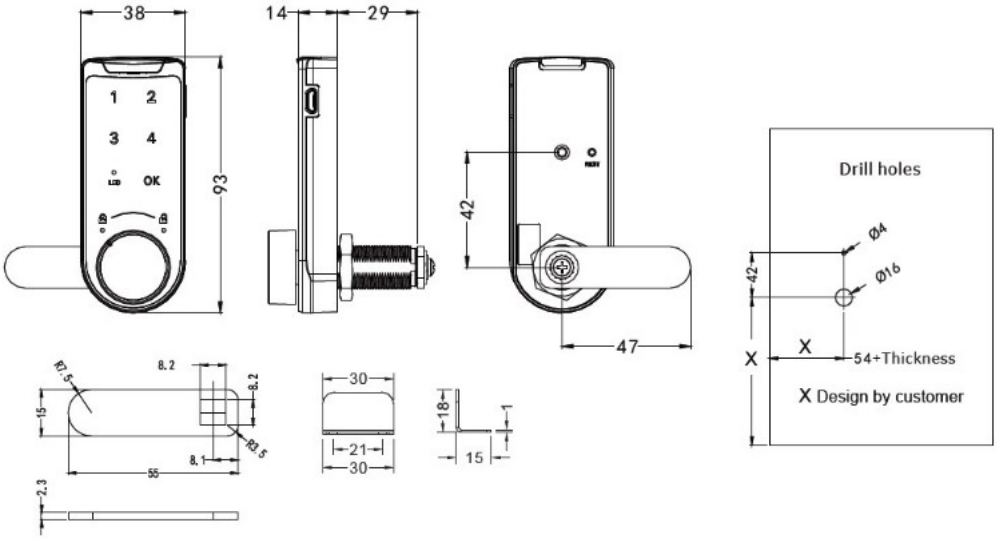

SISO A/S
Mileparken 11
DK-2740 Skovlunde
Denmark
VAT: DK 24786013

Phone +45 45 830 900

www.siso.dk
siso@siso.dk

Danske Bank
Nytorv Branch
Copenhagen
SWIFT: DABADKKK

Account no.
4180 3112 112936
IBAN Account
DK7230003112112936